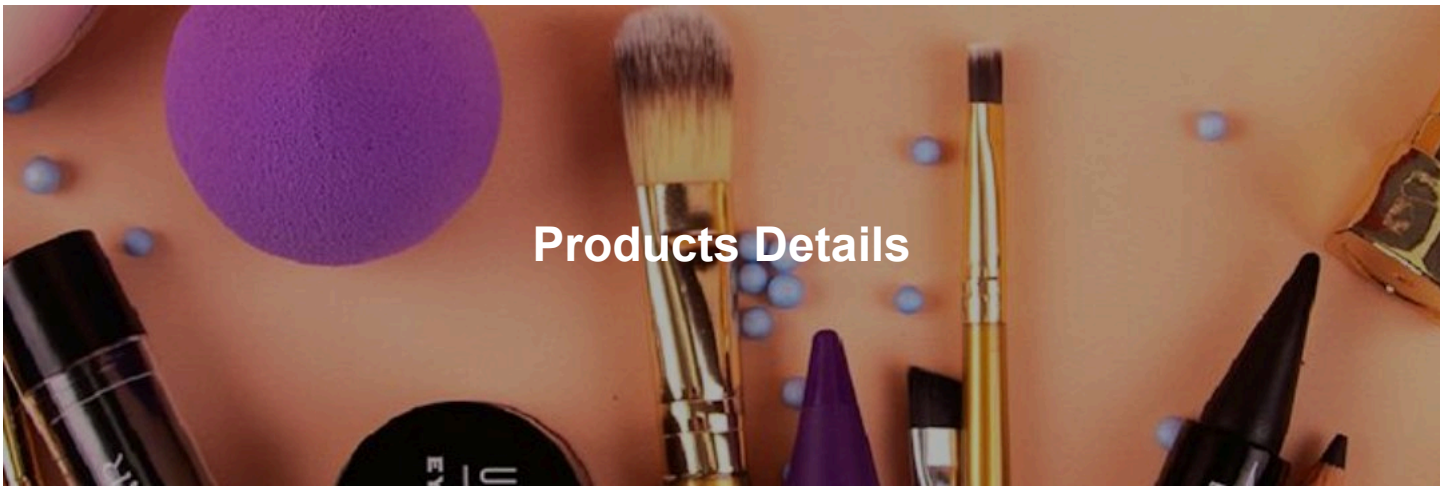

SINO Digital Readout System
Digital Readout Kits
3 Axis Digital Readout
CNC Vertical Machining Center
2 Axis Digital Readout
Single Axis Digital Readout
Glass Linear Encoder
Magnetic Linear Encoder
Milling Machine DRO
Lathe Machine DRO
EDM Machine DRO
Boring Machine DRO
Optical Angle Encoder
CNC Machine Accessories

Brand Name:	SINO
Model Number:	SDS6-3'
MOQ:	1 PC
Price:	Negotial
Packaging Details:	Carton
Payment Terms:	T/T, L/C

Get Best Price

Detail Information | Product Description

Contact Us

Ms. Berlina

sino_trade@163.com

Chat Now

Detail Information

Place Of Origin:	Guangzhou, CHINA	Certification:	CE,RoHS
Name:	SINO SDS6-3VA 3 Axis Digital Readout System Linear Encoder For High Resolution Measurement	Number Of Axis:	3 Axis Dig
Material:	Metal/Iron/Plastic	Signal:	TTL / RS2
Voltage:	AC100-240V / 50-60Hz	Suitable For:	Milling Ma Machine
Resolution:	1.5um,5um,0.5um, 01um	Color:	Grey
Supply Ability:	1000 Pcs Per Month		
Highlight:	High Resolution 3 Axis Digital Readout, SINO 3 Axis Digital Readout, Linear Encoder 3 Axis D		

Product Description

SINO SDS6-3VA High-Resolution 3-Axis DRO Measuring System with Linear Encoder for CNC Milling an

Key features of the SINO 3 Axis DRO with TTL input include:

3-Axis Measurement Precision: The DRO system enables seamless measurement and display of three axes—typically X, Y, an manage multiple machine axes concurrently.
TTL Input Compatibility: Designed to interface seamlessly with TTL (Transistor-Transistor Logic) input signals, the DRO system sensors and encoders commonly utilized in high-resolution measurement setups.
High-Resolution Accuracy: With its advanced technology, the DRO system delivers superior high-resolution measurement capa positioning essential for intricate machining tasks.
Versatile Compatibility: Engineered to be compatible with both lathe and milling machine operations, the DRO system offers ver applications, enhancing productivity and performance.
Intuitive Interface: Crafted with a user-centric design, the DRO system features an intuitive interface that facilitates easy operati measurement functions and settings, streamlining workflow for enhanced efficiency.
For comprehensive technical specifications and compatibility details pertaining to the SINO 3-Axis DRO with TTL input, it is adv supplier prior to procurement.

Improved Functions of SINO Opitical Sensor

3-Axis Functionality: The system facilitates concurrent monitoring and positioning of multiple axes by supporting three-axis mea and Z axes.
Digital Readout: Equipped with a digital display unit, the SDS6-3VA presents measurement readings in a clear and easily reada view values in either imperial or metric units based on their preferences.
Versatile Measurement Support: The system accommodates both linear and angular measurements, making it suitable for a div various machines and processes.

Packaging List :

1 PC	3 Axis LED digital readout SDS6-3V
1 PC	Protection cover
1 PC	Instruction Manual (English)
1 PC	Cable

Product image /photos:

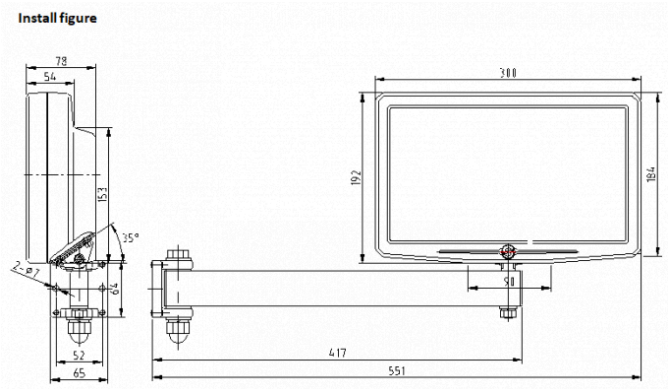

The rack in the picture is optioned, not standard product.